Shelving System

1145mm L x 500mm W x 800mm H
45″ L x 19.70″ W x 31.5″ H

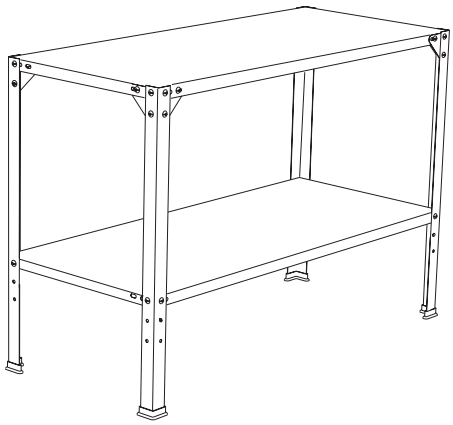

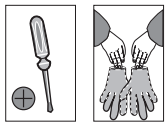

Contents

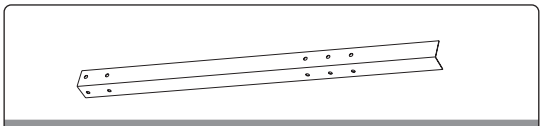

M03	800mm/31.5″	x4

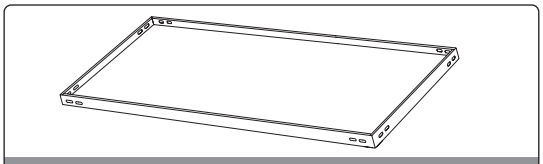

M02	1145x500mm/45x19.70″	x2

M01	x8	4035	x34	4035	x34	P01	x4

1

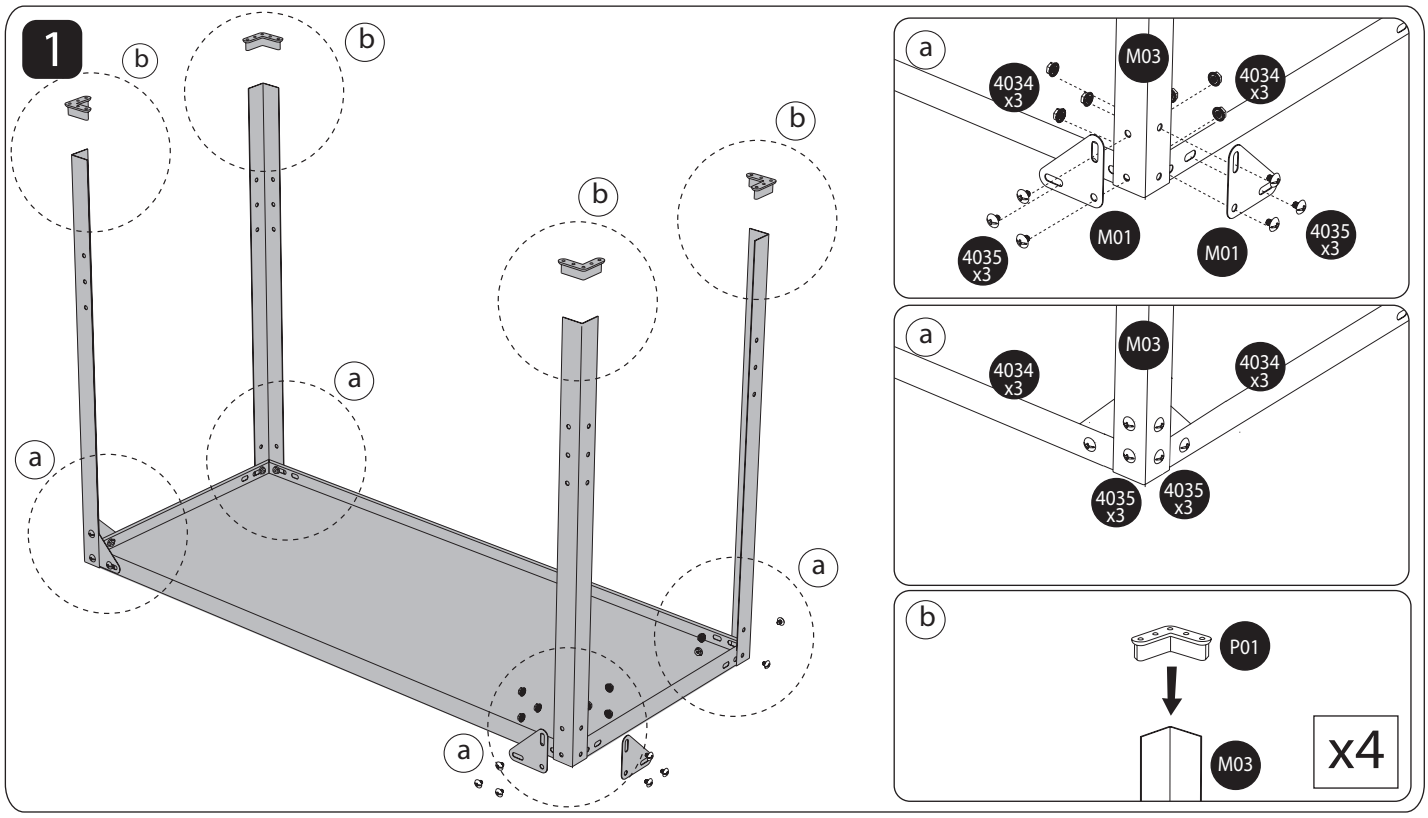
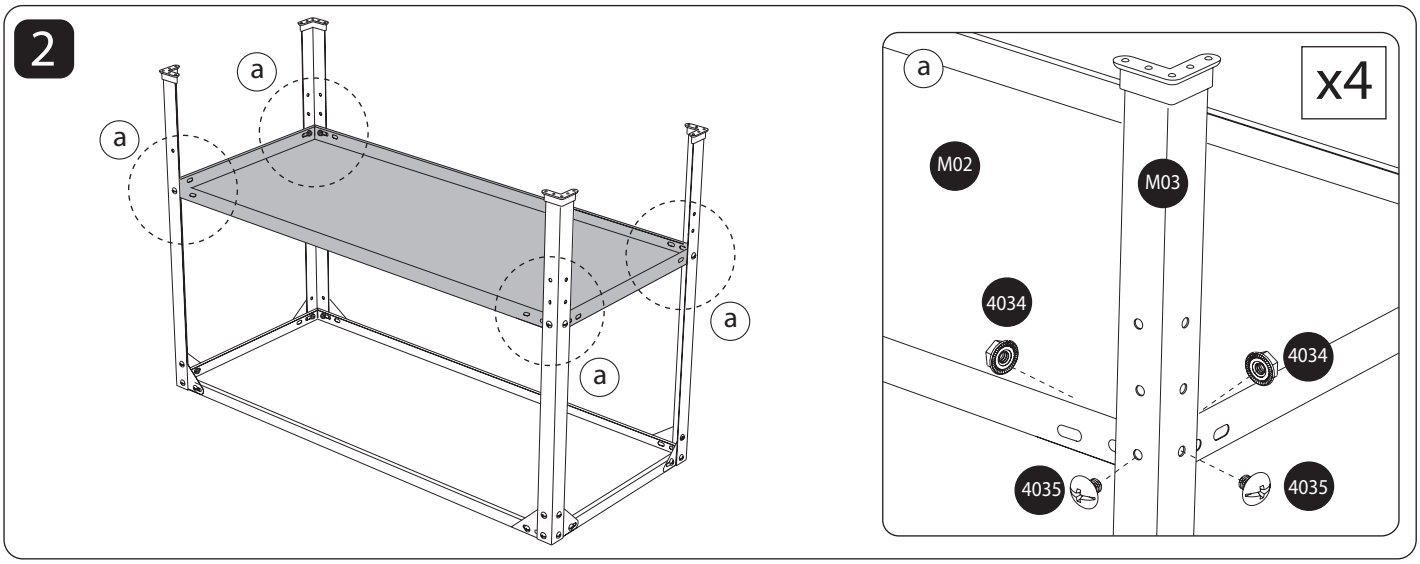
2